2014 Jaguar F-Type (X152) V8-5.0L SC

Vehicle > Powertrain Management > Diagrams > Electrical - Interactive Color (Non OE)

ENGINE CONTROLS

Engine Controls

Page 1 of 9

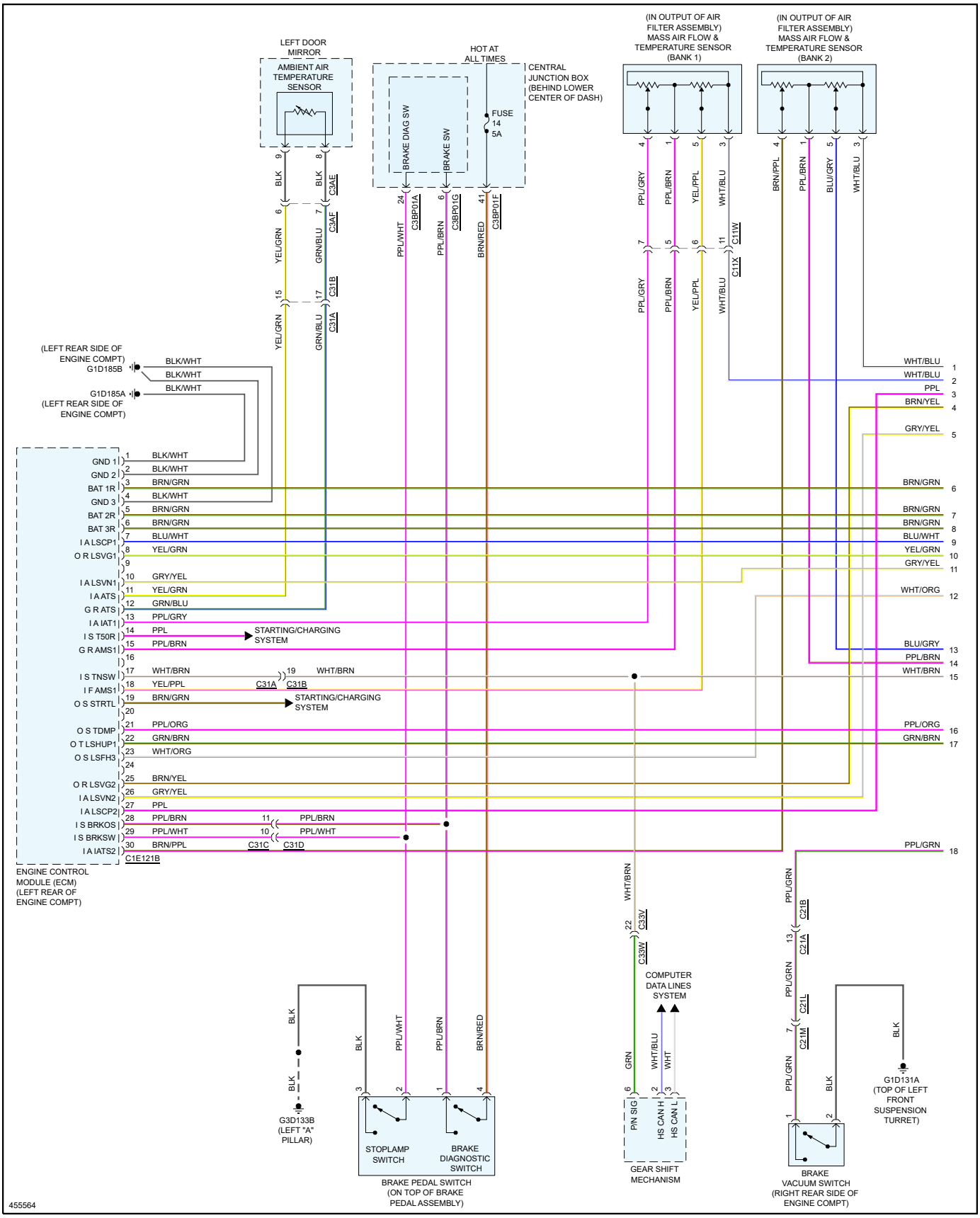
LEFT DOOR MIRROR
AMBIENT AIR TEMPERATURE SENSOR
HOT AT ALL TIMES
CENTRAL JUNCTION BOX (BEHIND LOWER CENTER OF DASH)
BRAKE DIAG SW
BRAKE SW
FUSE 14 5A
(IN OUTPUT OF AIR FILTER ASSEMBLY) MASS AIR FLOW & TEMPERATURE SENSOR (BANK 1)
(IN OUTPUT OF AIR FILTER ASSEMBLY) MASS AIR FLOW & TEMPERATURE SENSOR (BANK 2)
(LEFT REAR SIDE OF ENGINE COMPT) G1D185B
G1D185A (LEFT REAR SIDE OF ENGINE COMPT)
GND 1
GND 2
BAT 1R
GND 3
BAT 2R
BAT 3R
I A LSCP1
O R LSVG1
I A LSVN1
I A ATS
G R ATS
I A IAT1
I S T50R
G R AMS1
I S TNSW
I F AMS1
O S STRTL
O S TDMP
O T LSHUP1
O S LSFH3
O R LSVG2
I A LSVN2
I A LSCP2
I S BRKOS
I S BRKSW
I A IATS2
STARTING/CHARGING SYSTEM
ENGINE CONTROL MODULE (ECM) (LEFT REAR OF ENGINE COMPT)
C1E121B
G3D133B (LEFT "A" PILLAR)
STOPLAMP SWITCH
BRAKE DIAGNOSTIC SWITCH
BRAKE PEDAL SWITCH (ON TOP OF BRAKE PEDAL ASSEMBLY)
COMPUTER DATA LINES SYSTEM
P/N SIG
HS CAN H
HS CAN L
GEAR SHIFT MECHANISM
G1D131A (TOP OF LEFT FRONT SUSPENSION TURRET)
BRAKE VACUUM SWITCH (RIGHT REAR SIDE OF ENGINE COMPT)
455564

Page 2 of 9

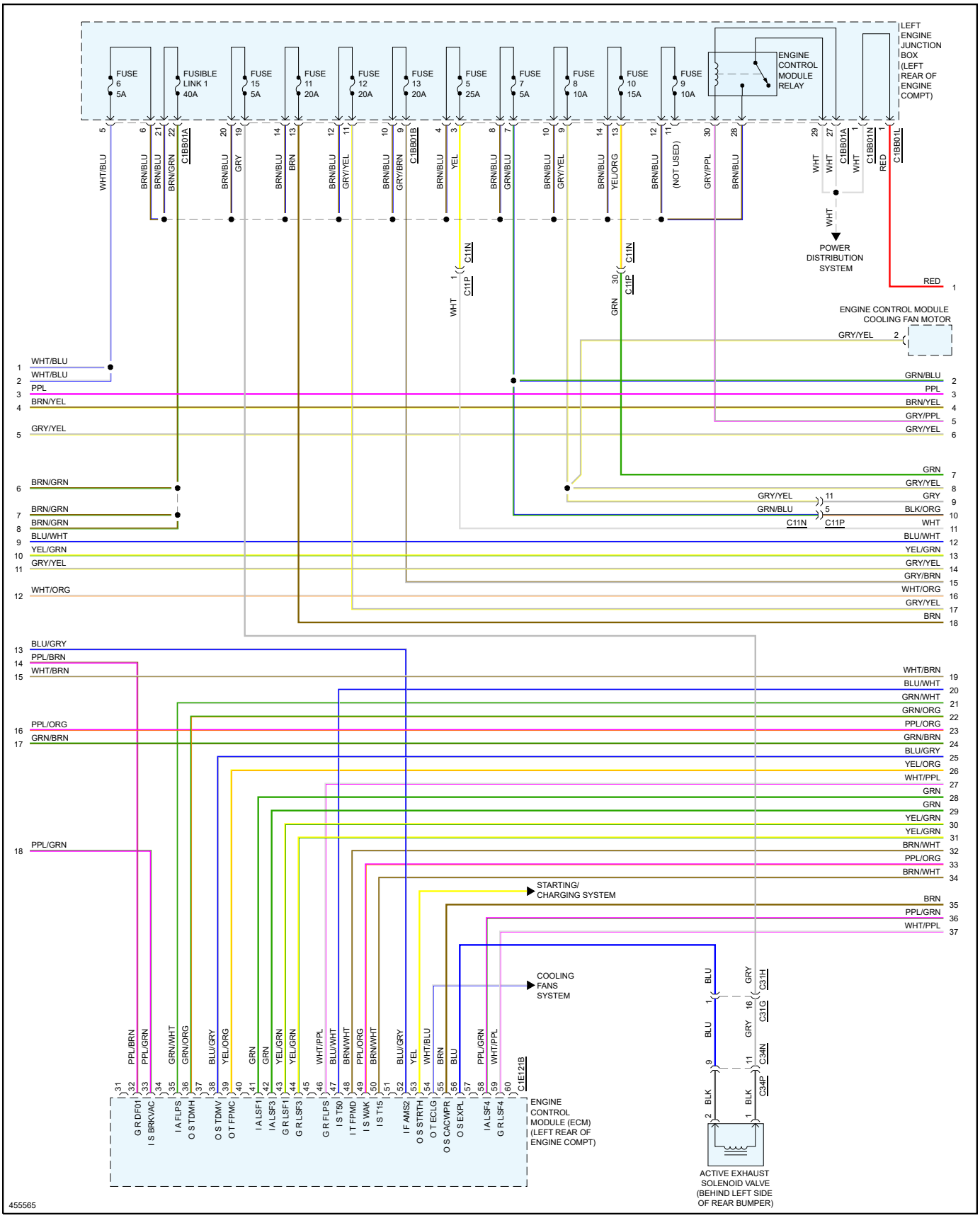
LEFT ENGINE JUNCTION BOX (LEFT REAR OF ENGINE COMPT)
FUSE 6 5A
FUSIBLE LINK 1 40A
FUSE 15 5A
FUSE 11 20A
FUSE 12 20A
FUSE 13 20A
FUSE 5 25A
FUSE 7 5A
FUSE 8 10A
FUSE 10 15A
FUSE 9 10A
ENGINE CONTROL MODULE RELAY
POWER DISTRIBUTION SYSTEM
ENGINE CONTROL MODULE COOLING FAN MOTOR
STARTING/ CHARGING SYSTEM
COOLING FANS SYSTEM
ENGINE CONTROL MODULE (ECM) (LEFT REAR OF ENGINE COMPT)
ACTIVE EXHAUST SOLENOID VALVE (BEHIND LEFT SIDE OF REAR BUMPER)
455565

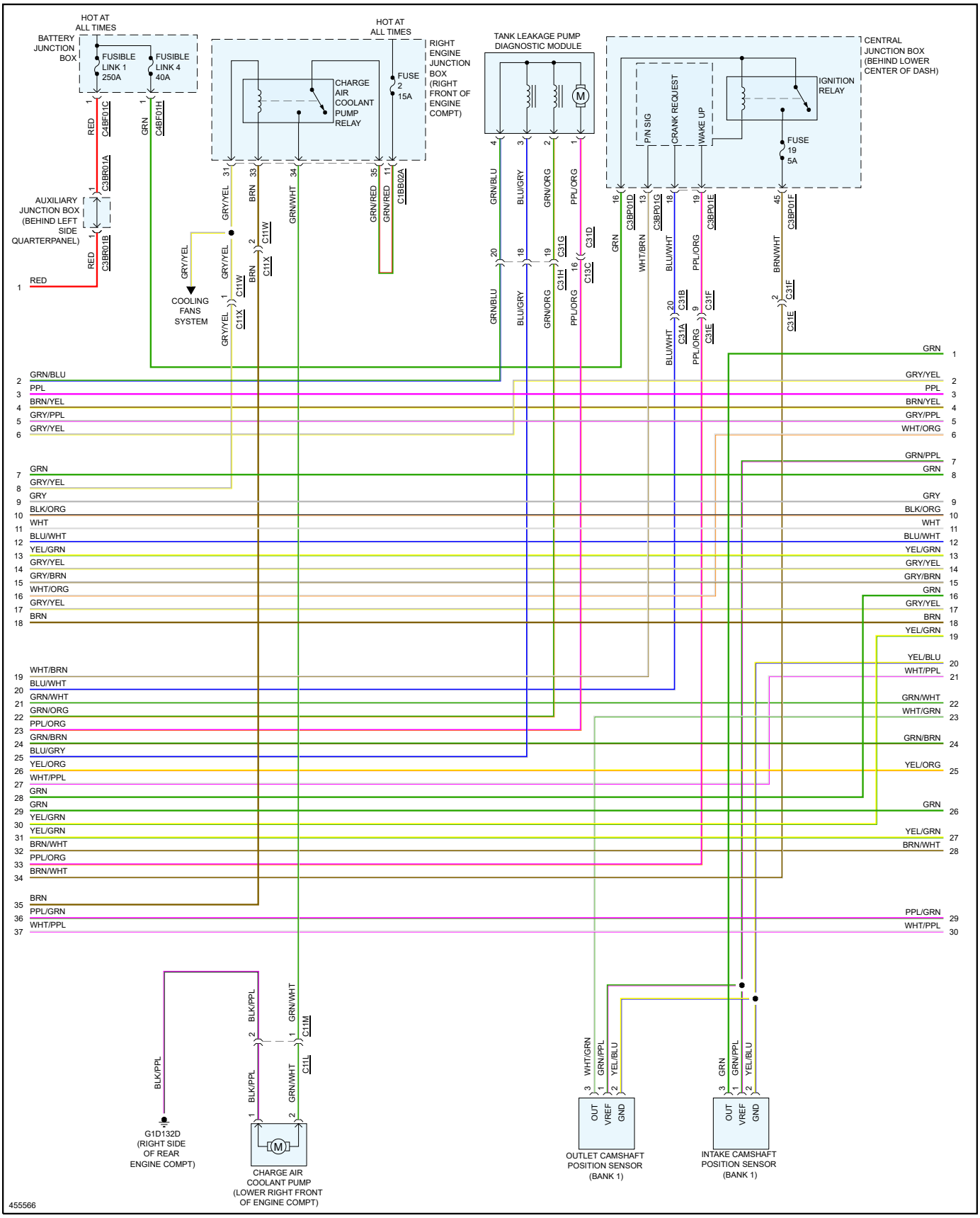
HOT AT ALL TIMES
BATTERY JUNCTION BOX
FUSIBLE LINK 1 250A
FUSIBLE LINK 4 40A
HOT AT ALL TIMES
RIGHT ENGINE JUNCTION BOX (RIGHT FRONT OF ENGINE COMPT)
CHARGE AIR COOLANT PUMP RELAY
FUSE 2 15A
TANK LEAKAGE PUMP DIAGNOSTIC MODULE
CENTRAL JUNCTION BOX (BEHIND LOWER CENTER OF DASH)
IGNITION RELAY
P/N SIG
CRANK REQUEST
WAKE UP
FUSE 19 5A
AUXILIARY JUNCTION BOX (BEHIND LEFT SIDE QUARTERPANEL)
COOLING FANS SYSTEM
G1D132D (RIGHT SIDE OF REAR ENGINE COMPT)
CHARGE AIR COOLANT PUMP (LOWER RIGHT FRONT OF ENGINE COMPT)
OUTLET CAMSHAFT POSITION SENSOR (BANK 1)
INTAKE CAMSHAFT POSITION SENSOR (BANK 1)
OUT
VREF
GND
455566

Page 4 of 9

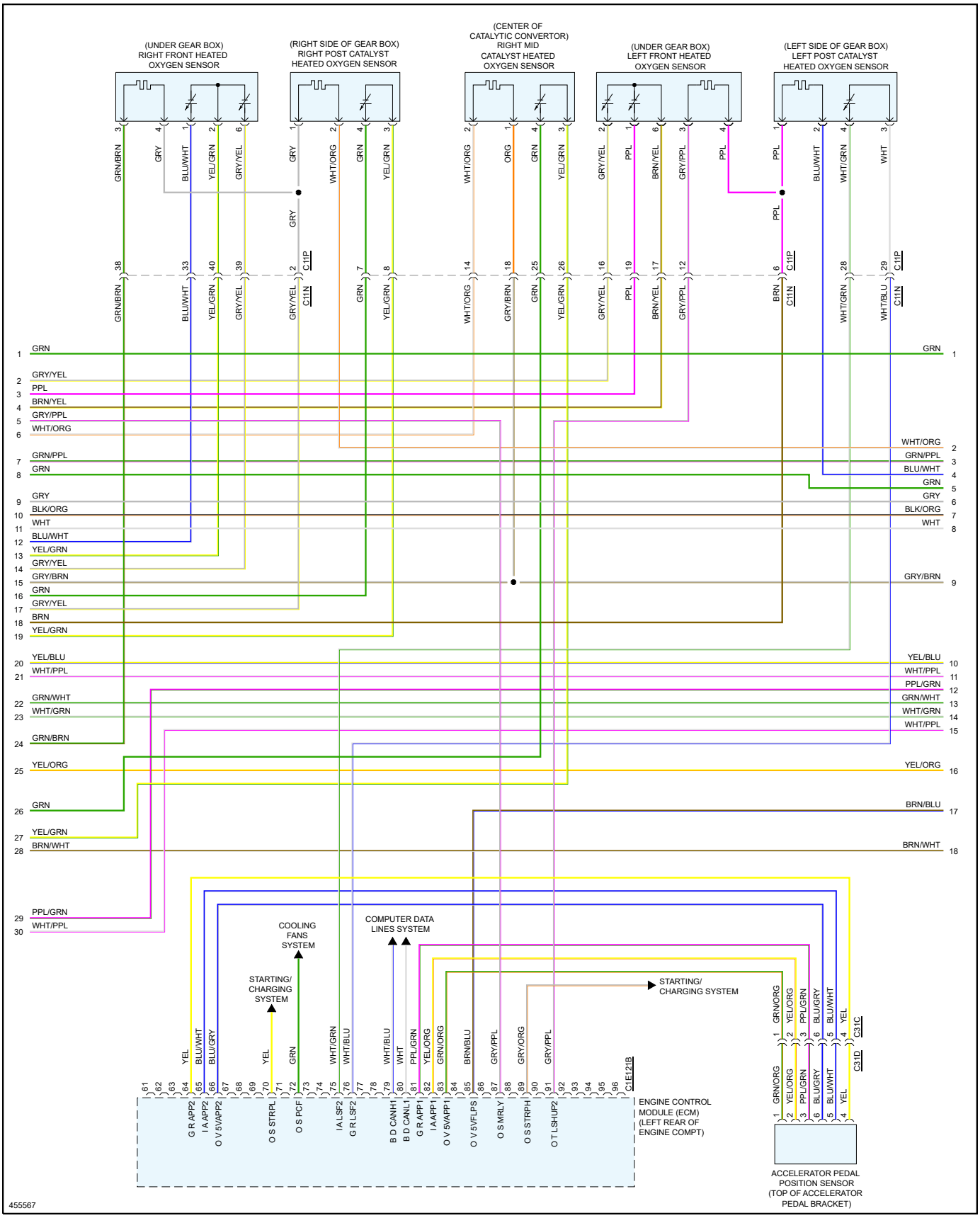
(UNDER GEAR BOX) RIGHT FRONT HEATED OXYGEN SENSOR
(RIGHT SIDE OF GEAR BOX) RIGHT POST CATALYST HEATED OXYGEN SENSOR
(CENTER OF CATALYTIC CONVERTOR) RIGHT MID CATALYST HEATED OXYGEN SENSOR
(UNDER GEAR BOX) LEFT FRONT HEATED OXYGEN SENSOR
(LEFT SIDE OF GEAR BOX) LEFT POST CATALYST HEATED OXYGEN SENSOR
C11P
C11N
COOLING FANS SYSTEM
COMPUTER DATA LINES SYSTEM
STARTING/ CHARGING SYSTEM
STARTING/ CHARGING SYSTEM
ENGINE CONTROL MODULE (ECM) (LEFT REAR OF ENGINE COMPT)
C1E121B
C31C
C31D
ACCELERATOR PEDAL POSITION SENSOR (TOP OF ACCELERATOR PEDAL BRACKET)
455567

Page 5 of 9

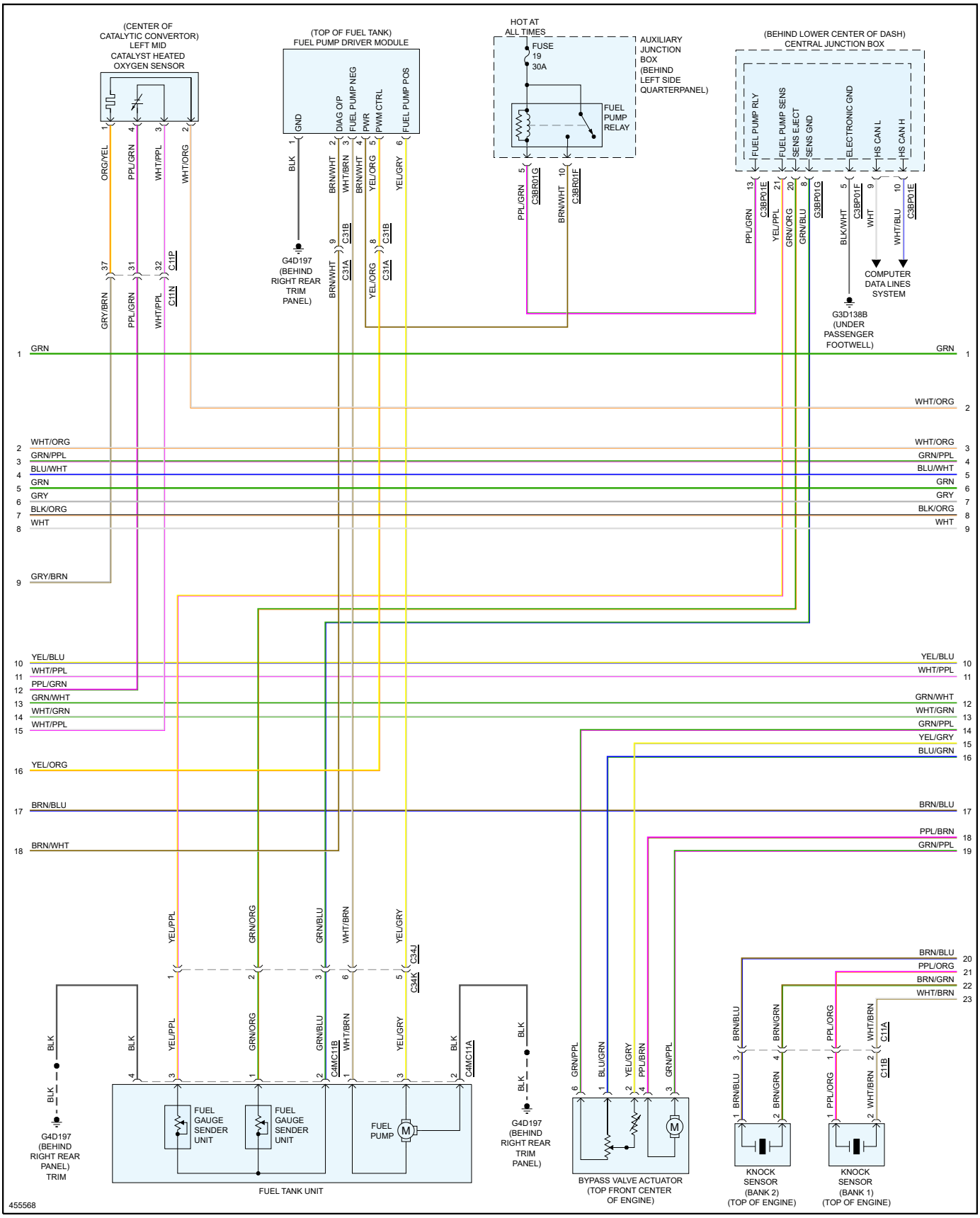
(CENTER OF CATALYTIC CONVERTOR) LEFT MID CATALYST HEATED OXYGEN SENSOR
(TOP OF FUEL TANK) FUEL PUMP DRIVER MODULE
GND
DIAG O/P
FUEL PUMP NEG
PWR
PWM CTRL
FUEL PUMP POS
HOT AT ALL TIMES
FUSE 19 30A
FUEL PUMP RELAY
AUXILIARY JUNCTION BOX (BEHIND LEFT SIDE QUARTERPANEL)
(BEHIND LOWER CENTER OF DASH) CENTRAL JUNCTION BOX
FUEL PUMP RLY
FUEL PUMP SENS
SENS EJECT
SENS GND
ELECTRONIC GND
HS CAN L
HS CAN H
G4D197 (BEHIND RIGHT REAR TRIM PANEL)
G3D138B (UNDER PASSENGER FOOTWELL)
COMPUTER DATA LINES SYSTEM
FUEL GAUGE SENDER UNIT
FUEL PUMP
FUEL TANK UNIT
BYPASS VALVE ACTUATOR (TOP FRONT CENTER OF ENGINE)
KNOCK SENSOR (BANK 2) (TOP OF ENGINE)
KNOCK SENSOR (BANK 1) (TOP OF ENGINE)
455568

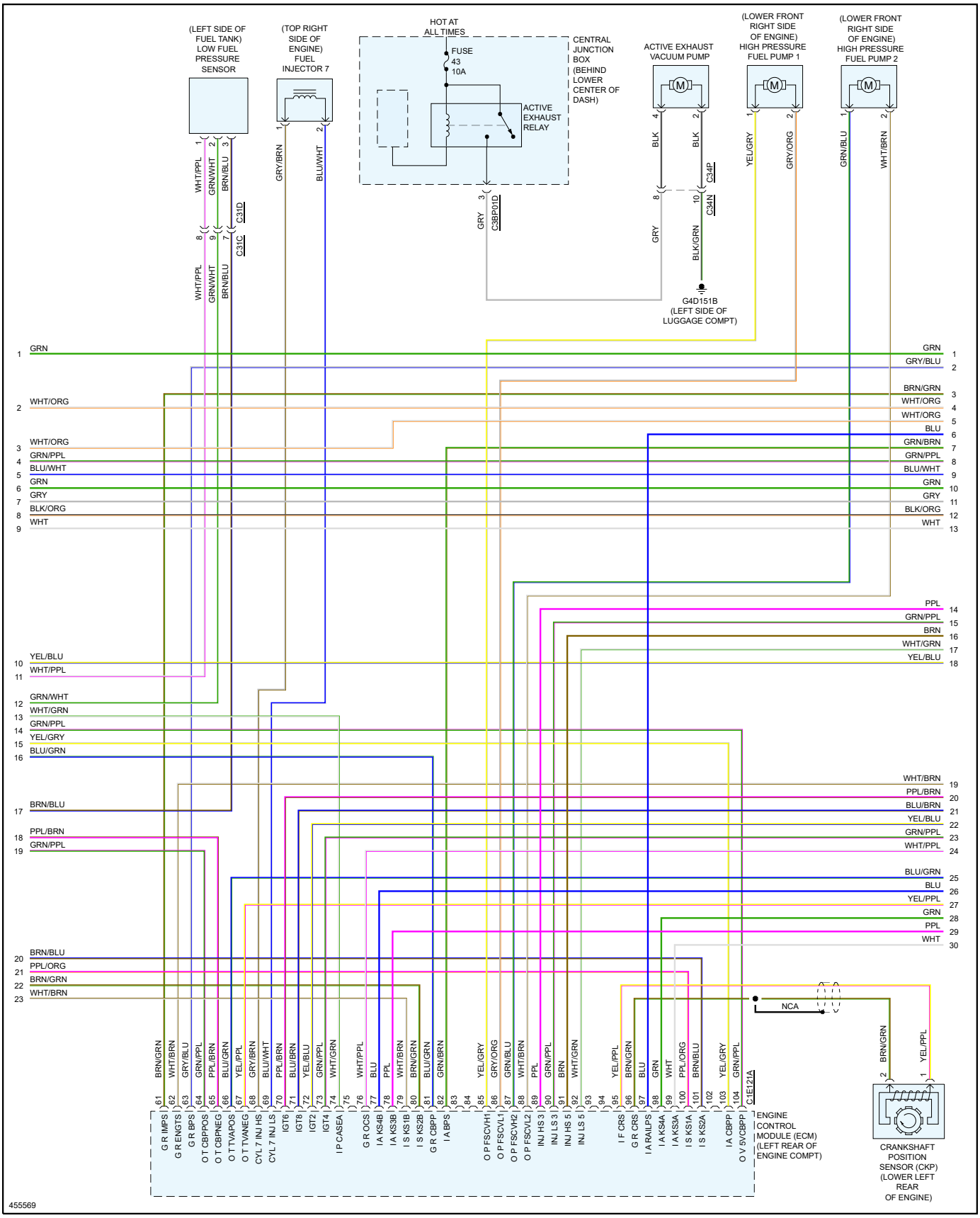
(LEFT SIDE OF FUEL TANK) LOW FUEL PRESSURE SENSOR
(TOP RIGHT SIDE OF ENGINE) FUEL INJECTOR 7
HOT AT ALL TIMES
FUSE 43 10A
CENTRAL JUNCTION BOX (BEHIND LOWER CENTER OF DASH)
ACTIVE EXHAUST RELAY
ACTIVE EXHAUST VACUUM PUMP
(LOWER FRONT RIGHT SIDE OF ENGINE) HIGH PRESSURE FUEL PUMP 1
(LOWER FRONT RIGHT SIDE OF ENGINE) HIGH PRESSURE FUEL PUMP 2
G4D151B (LEFT SIDE OF LUGGAGE COMPT)
NCA
ENGINE CONTROL MODULE (ECM) (LEFT REAR OF ENGINE COMPT)
CRANKSHAFT POSITION SENSOR (CKP) (LOWER LEFT REAR OF ENGINE)
455569

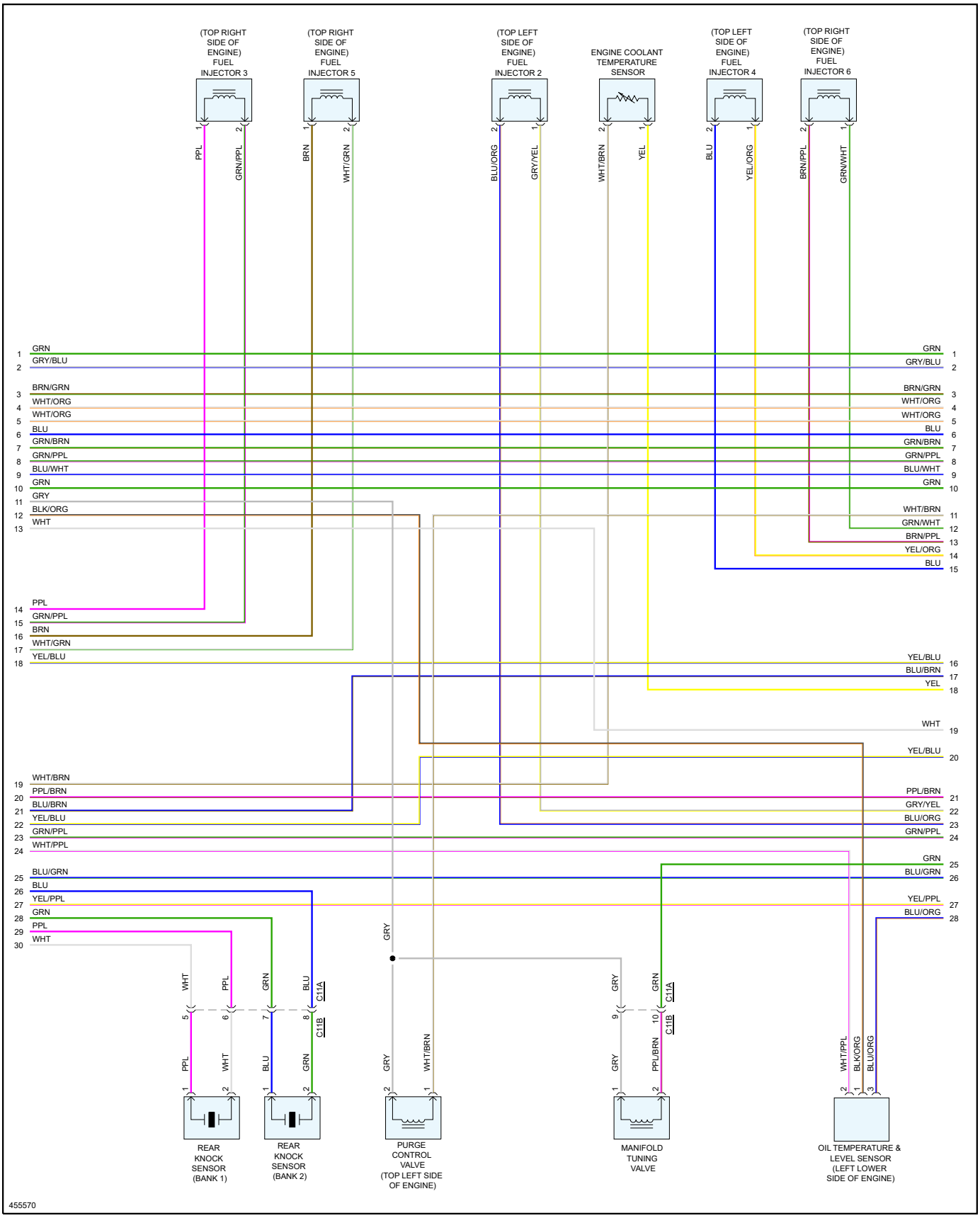
(TOP RIGHT SIDE OF ENGINE) FUEL INJECTOR 3
(TOP RIGHT SIDE OF ENGINE) FUEL INJECTOR 5
(TOP LEFT SIDE OF ENGINE) FUEL INJECTOR 2
ENGINE COOLANT TEMPERATURE SENSOR
(TOP LEFT SIDE OF ENGINE) FUEL INJECTOR 4
(TOP RIGHT SIDE OF ENGINE) FUEL INJECTOR 6
REAR KNOCK SENSOR (BANK 1)
REAR KNOCK SENSOR (BANK 2)
PURGE CONTROL VALVE (TOP LEFT SIDE OF ENGINE)
MANIFOLD TUNING VALVE
OIL TEMPERATURE & LEVEL SENSOR (LEFT LOWER SIDE OF ENGINE)
C11A
C11B
455570

Page 8 of 9

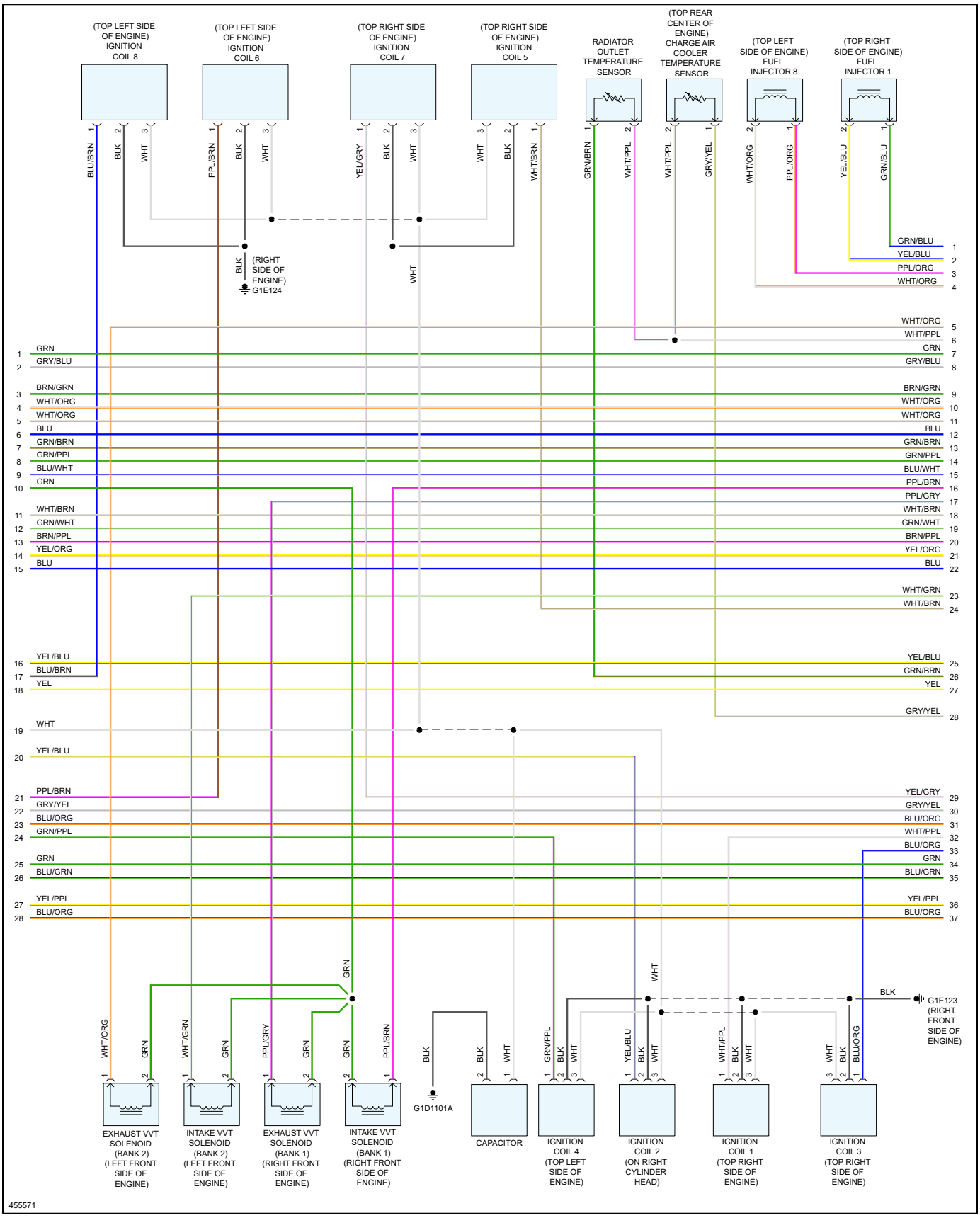
(TOP LEFT SIDE OF ENGINE) IGNITION COIL 8
(TOP LEFT SIDE OF ENGINE) IGNITION COIL 6
(TOP RIGHT SIDE OF ENGINE) IGNITION COIL 7
(TOP RIGHT SIDE OF ENGINE) IGNITION COIL 5
RADIATOR OUTLET TEMPERATURE SENSOR
(TOP REAR CENTER OF ENGINE) CHARGE AIR COOLER TEMPERATURE SENSOR
(TOP LEFT SIDE OF ENGINE) FUEL INJECTOR 8
(TOP RIGHT SIDE OF ENGINE) FUEL INJECTOR 1
(RIGHT SIDE OF ENGINE) G1E124
G1E123 (RIGHT FRONT SIDE OF ENGINE)
G1D1101A
EXHAUST VVT SOLENOID (BANK 2) (LEFT FRONT SIDE OF ENGINE)
INTAKE VVT SOLENOID (BANK 2) (LEFT FRONT SIDE OF ENGINE)
EXHAUST VVT SOLENOID (BANK 1) (RIGHT FRONT SIDE OF ENGINE)
INTAKE VVT SOLENOID (BANK 1) (RIGHT FRONT SIDE OF ENGINE)
CAPACITOR
IGNITION COIL 4 (TOP LEFT SIDE OF ENGINE)
IGNITION COIL 2 (ON RIGHT CYLINDER HEAD)
IGNITION COIL 1 (TOP RIGHT SIDE OF ENGINE)
IGNITION COIL 3 (TOP RIGHT SIDE OF ENGINE)
455571

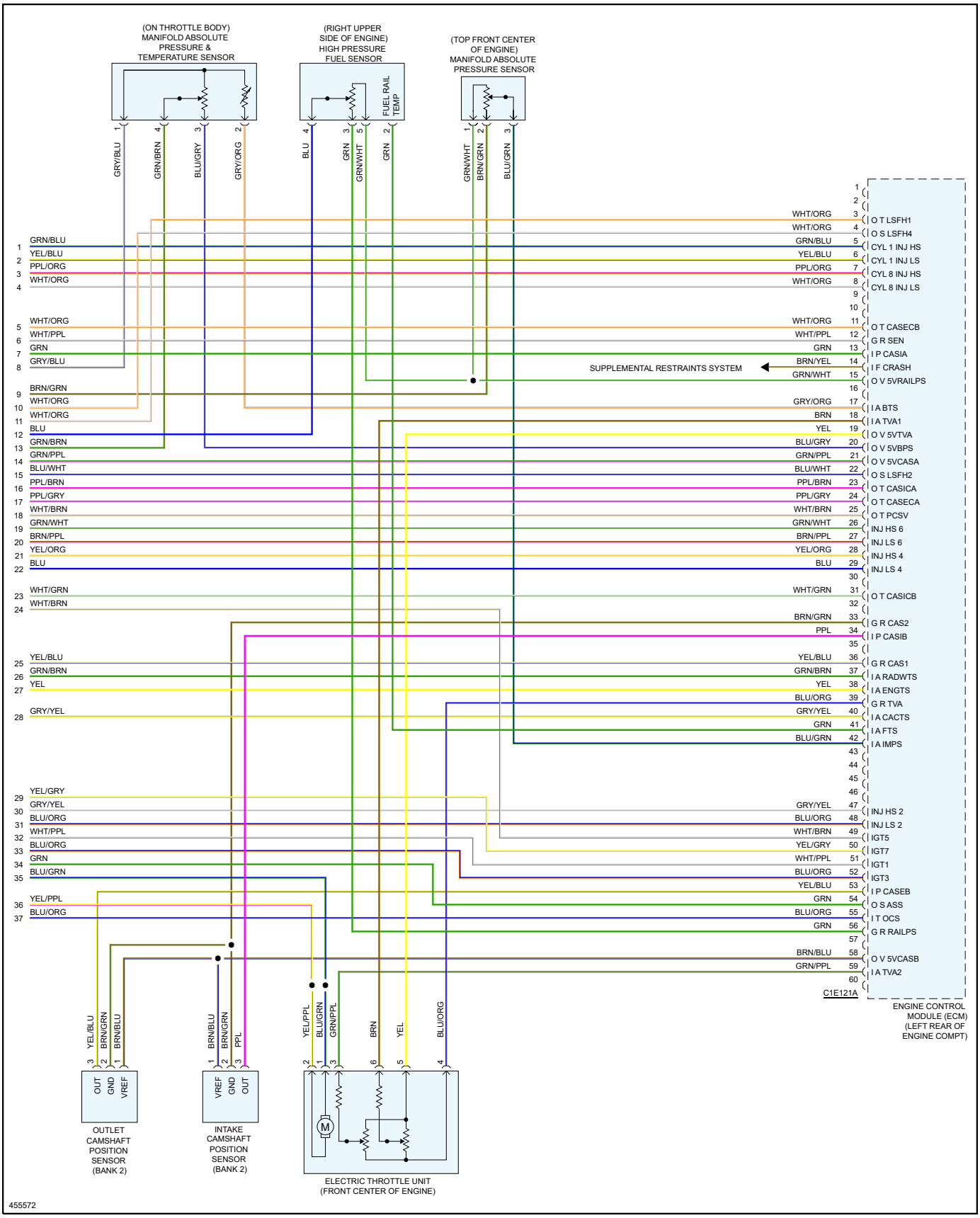
(ON THROTTLE BODY) MANIFOLD ABSOLUTE PRESSURE & TEMPERATURE SENSOR
(RIGHT UPPER SIDE OF ENGINE) HIGH PRESSURE FUEL SENSOR
FUEL RAIL TEMP
(TOP FRONT CENTER OF ENGINE) MANIFOLD ABSOLUTE PRESSURE SENSOR
SUPPLEMENTAL RESTRAINTS SYSTEM
O T LSFH1
O S LSFH4
CYL 1 INJ HS
CYL 1 INJ LS
CYL 8 INJ HS
CYL 8 INJ LS
O T CASECB
G R SEN
I P CASIA
I F CRASH
O V 5VRAILPS
I A BTS
I A TVA1
O V 5VTVA
O V 5VBPS
O V 5VCASA
O S LSFH2
O T CASICA
O T CASECA
O T PCSV
INJ HS 6
INJ LS 6
INJ HS 4
INJ LS 4
O T CASICB
G R CAS2
I P CASIB
G R CAS1
I A RADWTS
I A ENGTS
G R TVA
I A CACTS
I A FTS
I A IMPS
INJ HS 2
INJ LS 2
IGT5
IGT7
IGT1
IGT3
I P CASEB
O S ASS
I T OCS
G R RAILPS
O V 5VCASB
I A TVA2
C1E121A
ENGINE CONTROL MODULE (ECM) (LEFT REAR OF ENGINE COMPT)
OUTLET CAMSHAFT POSITION SENSOR (BANK 2)
INTAKE CAMSHAFT POSITION SENSOR (BANK 2)
ELECTRIC THROTTLE UNIT (FRONT CENTER OF ENGINE)
455572